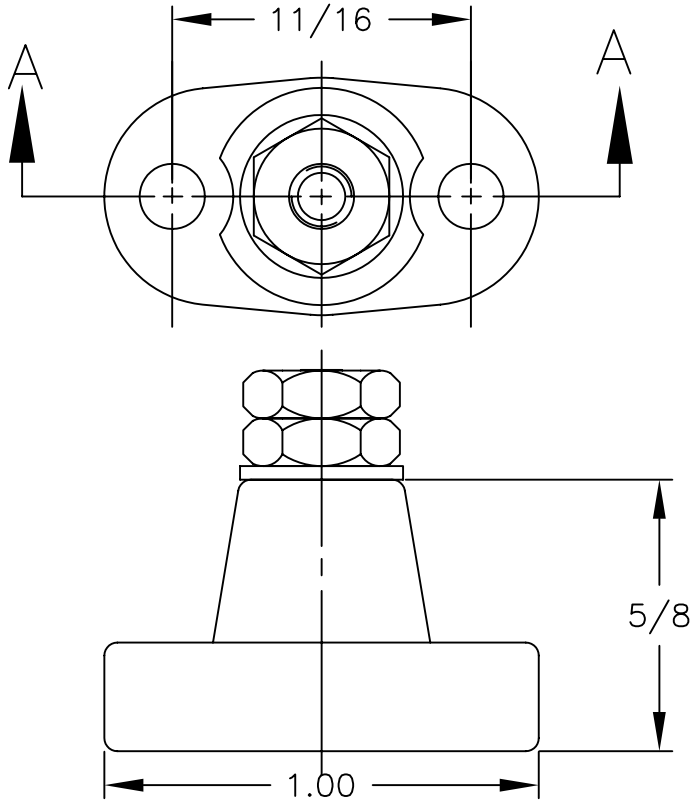

REVISIONS				
SYM	DESCRIPTION	REVISED BY	DATE	APPR

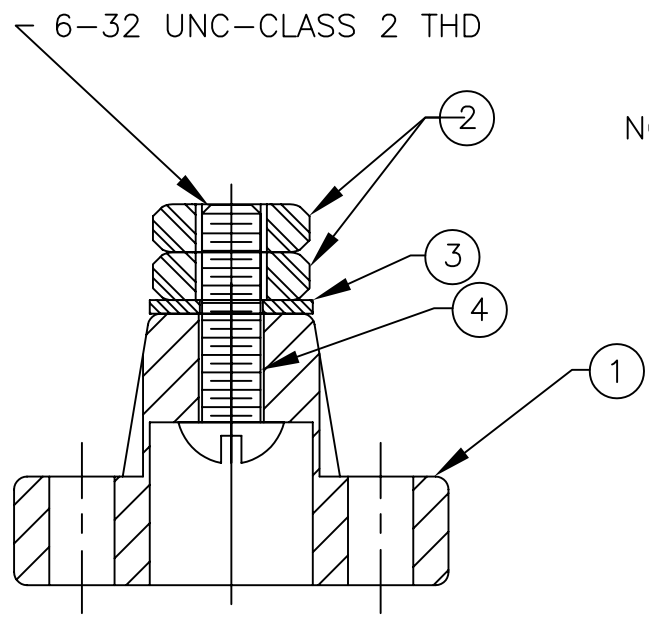

NOTE:
PARTS PACKAGED
UNASSEMBLED

BILL OF MATERIALS				
DET.	QTY.	DESCRIPTION	MATERIAL	FINISH
1	1	INSULATOR	STEATITE	GLAZED
2	2	HEX NUT	BRASS	NICKEL
3	1	WASHER	BRASS	NICKEL
4	1	SCREW	BRASS	NICKEL

MATERIAL: "SEE TABLE"

FINISH: "SEE TABLE"

DIMENSIONAL TOLERANCES
UNLESS OTHERWISE SPECIFIED

.XX	.XXX	.XXXX
---	---	---

FRACTIONS	ANGLES	SCALE
---	---	2:1

HEAT TREAT: ---

PLOT SCALE: 1=1

TITLE: 9524

HIGH VOLTAGE
INSULATOR

DRAWN: ED KLINE DATE: 2-12-98

CHECKED: E.McKINNEY DATE: 2-12-98

APPROVED: DATE:

ABBATRON

Electronic Connectors and Hardware

13680 S. MOSIERTOWN RD
MEADVILLE, PA 16335

SIZE	DRAWING NUMBER	ISSUE
A	SD: 9524	B